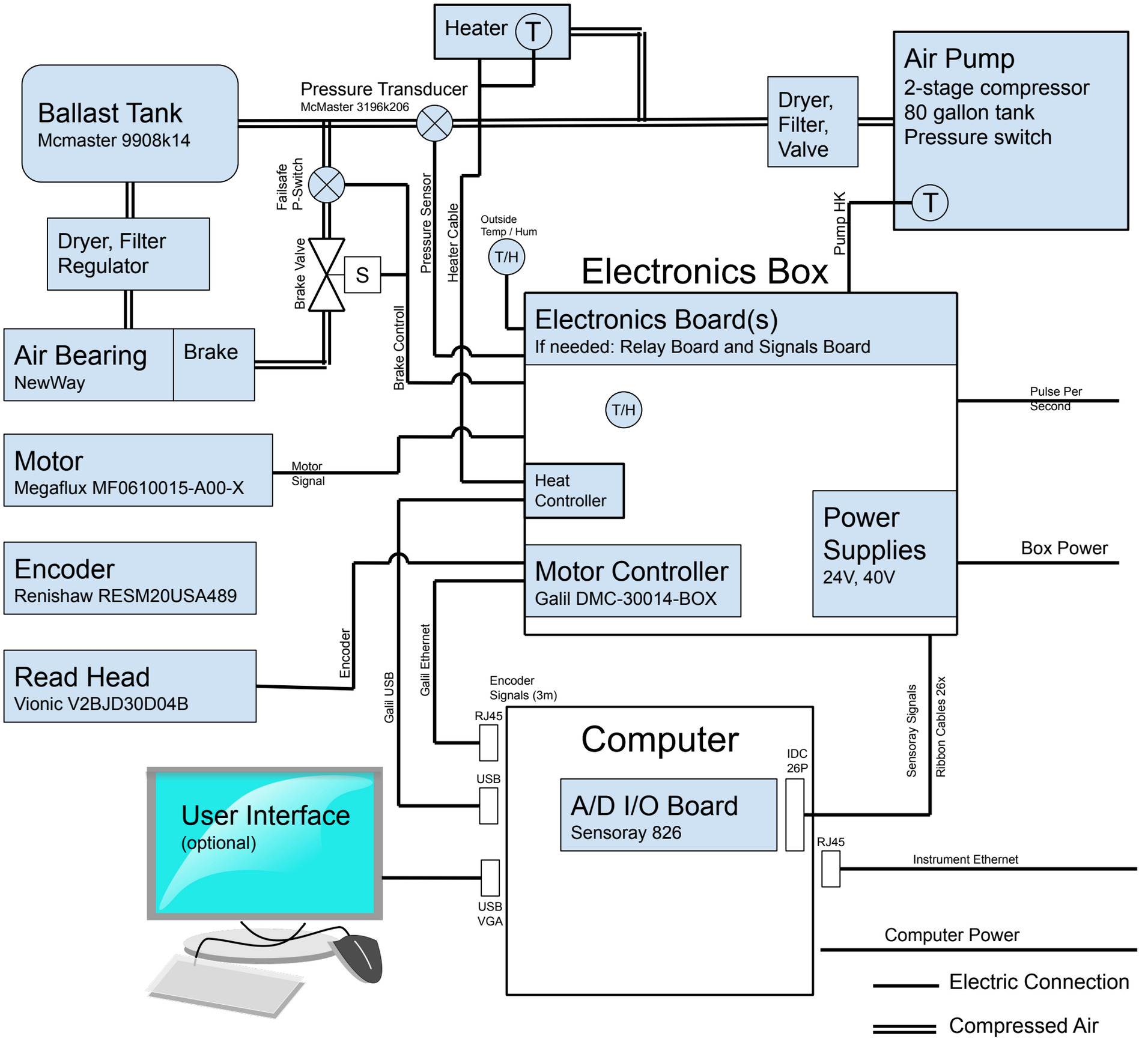Toltec HWP Rotator Electronics Diagram